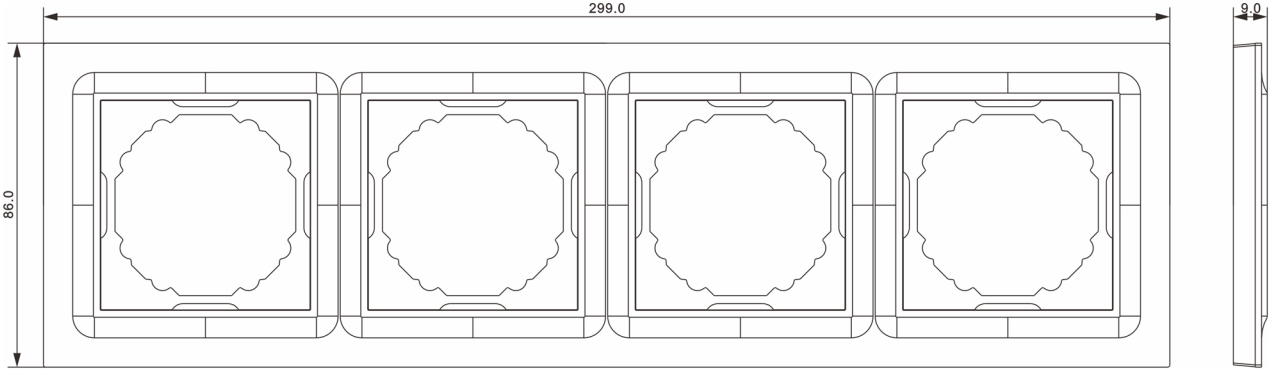
299.0
9.0
86.0