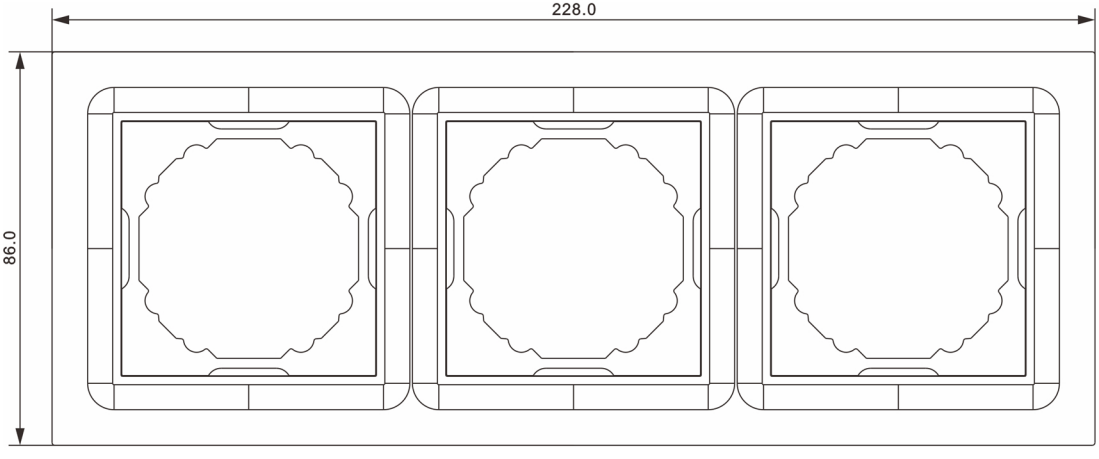
228.0
86.0


9.0